ISO 9001:2008

MID 2004/22/TC
PED 91/23/EC

PI Controls Europe

INSTRUMENTATION SOLUTION PROVIDER

- Electromagnetic flowmeter
- Vortex flowmeter
- Turbine flowmeter
- Ultrasonic flowmeter
- Throttling device
- Rotameter

CONTENTS

1.Products features

1.1 Features

- Size : DN3 ~ DN3000mm
- Accuracy : ± 0.5%, ± 0.3% are selectable
- Flow velocity : 0.1 ~ 15m/s
- Media temperature : -20℃ ~ +160℃
- Ambient temperature : -25℃ ~ 60℃
- Housing material : carbon steel(stainless steel optional) DN3 ~ DN3000mm
- Flange : carbon steel (galvanized or coating), stainless steel optional
- Electrode with shielding case, signal stable
- Electrode material:SUS316,Hastelloy C,Titanium,Tantalum etc
- Electrode type: General type,scraper type and replaceable type
- Liner material:Teflon,PFA,F46,Neoprene,Polyurethan
- Protection class : IP67, IP68 (optional)
- Power supply : 220VAC, 24VDC ,3.6V(battery powered)
- Communication:RS232,RS485 or HART are selectable
- Flow output : Analog output,frequency output,pulse output
- Control output : forward / reverse, high alarm / low alarm etc.
- Control input : external zero return, external totalizer reset, external totalizer stop
- Pulse output : active / passive, frequency and pulse width adjustable
- Test and diagnosis : self - diagnosis, failure record, current output test, control input / output test, emulation test mode etc.
- Others : parameter protection, indication of sensor parameter, span adjustment, zero adjust, small signal cutting, smoothing, access to external memorizer, writing No. etc

1.2 Applications

- Water abstraction
- Water purification and desalination
- Drinking water distribution networks
- Revenue metering or billing
- Leakage detection
- Irrigation
- Industry water
- Cooling water
- Wastewater
- Sewage and sludge
- Sea water

1.3 Options

Remote type electromagnetic flowmeter

Electromagnetic Flowmeter

- **A reliable "friend" for industrial applications and flow measurements of process liquids & slurries**

- Flange connection version
  For flowrates upto 380, 000m /h and more.Meter sizes from DN6 to DN3000mm
- Insertion version
  Widely used in the area of large-caliber flowmeter.Simple structure,fast installation and easy maintenance.
- Battery powered version
  Using internal battery power supply, no need external power supply,battery life more than 5 years.
- Wafer and tri-clamp(sanitary) version

1.4 Body structure

Modular design

- separate version
  with connection box
  signal converter in field housing
- compact version

Our excitation COPPER coil adopts Siemens technology

Different types of electrode for ordinary liquid or chemical liquid

LCD display,four thin-film button for dataset

Fully welded housing can be made, absolutely tight, rugged, resistant to corrosion

Ground wire

Special liner material can be made according to your requirement

For flow rates from 0.01m^3/h to 380,000 m^3/h and more

Meter sizes DN3-DN3000mm

1.5 Principle of Operation

Faraday's Laws of Induction form the basis for the electromagnetic flowmeter which states that a voltage is generated in a conductor as it moves through a magnetic field.

This principle is applied to a conductive fluid which flows through the meter tube perpendicular to the direction of the magnetic field (see Schematic).

The voltage which is induced in the fluid is measured at two electrodes located diametrically opposite to each other. This signal voltage U_E is proportional to the magnetic induction **B**, the electrode spacing **D** and the average fluid velocity **v**.

Since the magnetic induction **B** and the electrode spacing **D** are constant values, the signal voltage U_E is proportional to the average flow velocity **v**. The equation for calculating the volumetric flowrate shows that the sig-nal voltage U_E is linear and proportional to the volumetric flowrate.

The induced signal voltage is converted into scaled, analog and digital output signals in the converter.

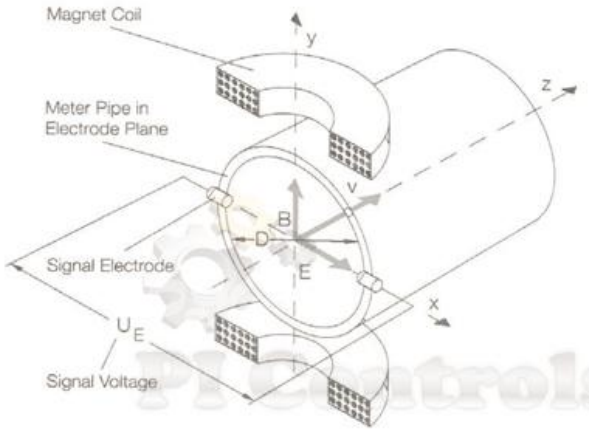

U_E = Signal Voltage (V)
B = Magnetic Induction (T)
D = Electrode Specing (m)
v = Average Flow Velocity (m/s)
*qv = Volume Flowrate (㎥/s)
K = Ratio factor

$$U_E \sim B \cdot D \cdot V \cdot K$$

$$qv = \frac{D^2\pi}{4} \cdot V$$

$$qv = \frac{\pi D}{4KB} U_E$$

1. Electromagnetic Flowmeter Schematic

Flange connection flow meter

Insertion type flow meter

Battery powered flow meter

2.Converters and sensors

2.1 Converters and sensors overview

Compact type converter

Battery powered type converter

Remote type converter

Sensors

HTLD Flange connection sensor

HTLD/C Insertion type sensor

HTLD Wafer type sensor

HTLD Tri-clamp type sensor

Flowmeters with different converters and sensors

ISO 9001:2008

MID 2004/22/TC
PED 91/23/EC

2.2 Converters

2.2.1 HTLD/Z converters drawing and features

Circinal Panel converter

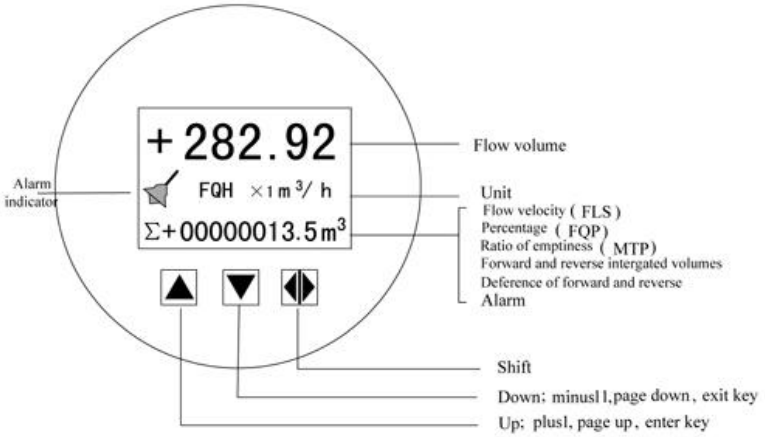

Keys on circinal panel and large LCD display

Exterior size of the integrated circinal shells

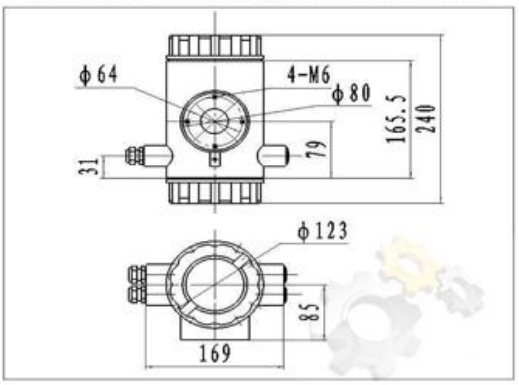

Squared panel converter

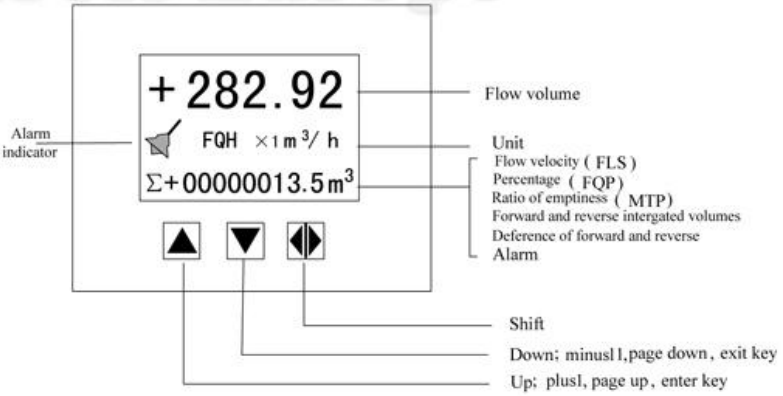

Keys on squared panel and large LCD display

Exterior size of the squared converter shells

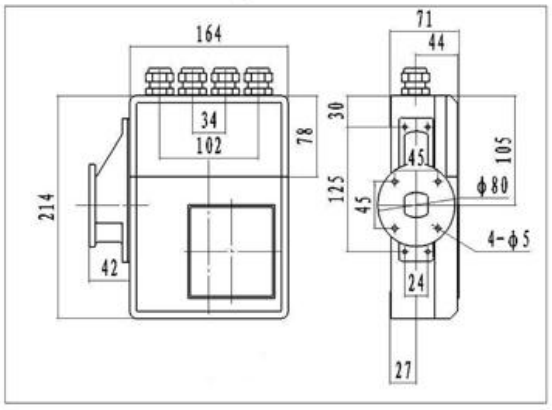

1. Basic function

- Low-frequency square-wave exciting，exciting frequency：1/16 power frequency、1/20power frequency、1/25 power frequency;
- High-frequency square-wave exciting，exciting frequency：1/2 power frequency（for grouting liquid measure）；
- Exciting current can be selected for 125mA、187.5mA、250mA、500 mA；
- No need to add empty pipeline measurement, and can measure continuously, alarm by fixed value;
- Current speed range：0.1 --- 15m/s，current speed resolution：0.5mm/s;
- AC high-frequency switching power，range of voltage：85VAC --- 250VAC;
- DC 24V switching power，range of voltage：20VDC --- 36VDC；
- Network function：MODBUS、GPRS、PROFIBUS 、HARTcommunication interface（choose）；
- Chinese or English displaying mode, (other languages can be set)；
- Three integrator gross inside, respective register: Forward gross, reverse gross and minus value gross.

2.Especial function

- Recording time when power turn-off, to record power broken time of instrument system automatically and recruit to count the missing flux；
- Recording function of hour gross, to record the flux gross by hour, fit for timed measure;
- Infrared handing telecontrol keyboard，all the functions of far-untouched controlling converter.

3. Normal operating conditions

Ambient Temperature Ranges：fission –10～+60℃;

Relative Humidity：5%～90%;

Power Supply: 85～250V，45～63Hz (single-phase AC).

Dissipation Power: <20W（ After connecting sensor）.

4.Type of connecting with sensors

- The integrated circinal shells: circinal shells, shells connect with the flange directly, explosion-proof;
- The integrated squared shells: squared shells, shells connect with the flange directly；

- The split squared shells: squared shells (hang on the wall), Signal converters connect with cable of sensor;

Circinal Panel converter with flange connection sensor

Squared panel converter with flange connection sensor

5. Basic circuit of converter

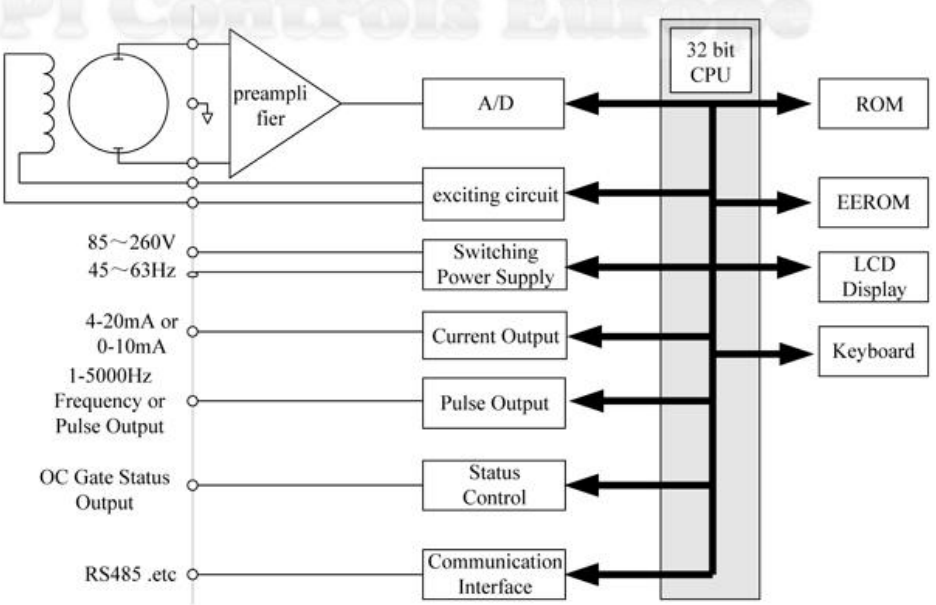

Structure Of Converter's Circuit

The converter can supply exciting current to the coil in the sensor of electronetic flowmeters, the head amplifier amplifies the electromotive force from the sensor and converts it into standard signals of current or frequency so that the signals can be used for displaying, controlling and processing. See structure of converter circuit shown above.

2.2.1 HTLD/D converters drawing and features

Battery powered converter

Display panel

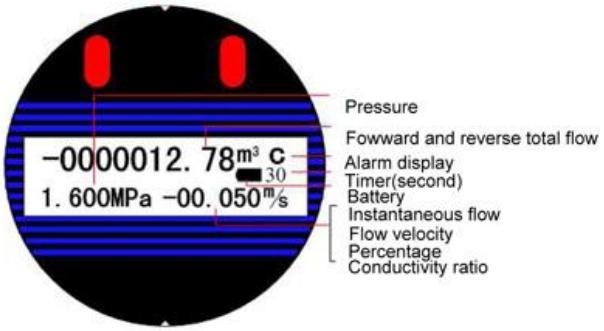

Hand -operated controller

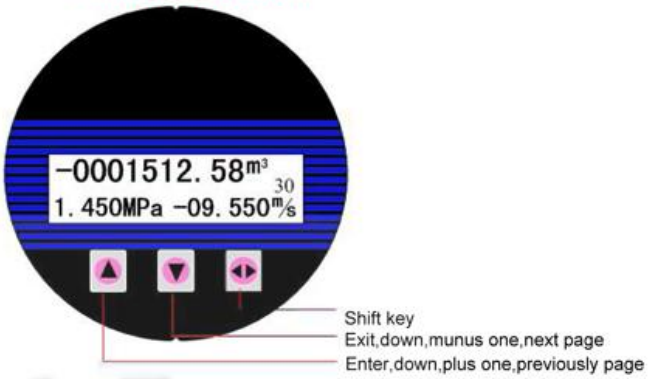

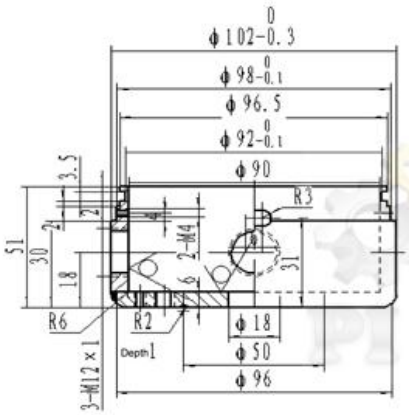

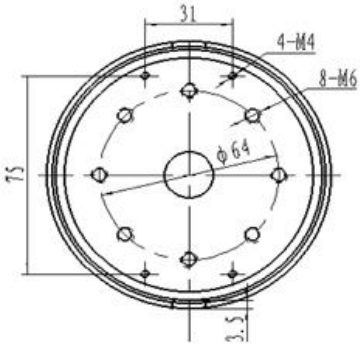

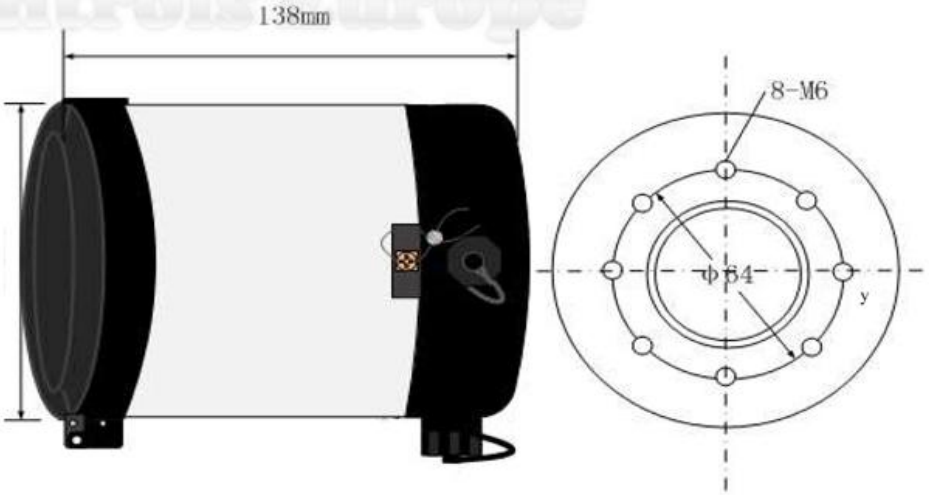

Basic parameters

- Working temperature: -20 ℃ -50 ℃
- Operating humidity: ≦ 95%
- Protection class: IP68
- Flow rate measuring range: 0 --- 15 m / s
- Medium conductivity: clean water> 20 μs / cm
- For measuring diameter: DN10 --- DN800
- Supporting Accuracy class: 0.5
- Measurement parameters: instantaneous flow, instantaneous flow rate
- Record parameters: Flow cumulative total
- Detection and alarm parameters: Fluid empty pipe detection alarm, the excitation current detection alarm
- Scaled output signal: Unit volume flow pulse
- Communication: RS485 (modbus protocol), GPRS

Battery life(month)

Measuring cycle	50mA excitation	20mA excitation
30S	120	200
15S	60	100
14S	56	93
13S	52	86
12S	48	79
11S	44	73
10S	40	66
9S	36	59
8S	32	53
7S	28	46
6S	24	39
5S	20	33
4S	16	26
3S	12	19

Battery powered converter with flange connection sensor

Compact type battery powered flow meter

Remote type Battery powered flow meter

2.2 Sensors

2.2.1 Flange connection sensor features and drawing

Basic parameters

Caliver	DN3~DN3000mm
Nominal Pressure	0.6~4.0MPa(special pressure can be made to)
Accuracy	±0.5%，±0.3%or±0.2% are selectable
Liner material	Teflon,pfa,f46,Neoprene,POLY
Electrode Type	General type ,scraper type and replaceable type
Electrode material	Stainless steel SUS316,Hastelloy C,Titanium,Tantalum Platinum-iridium,etc
Ambient Temperature	25℃below zero to 60℃
Ambient Humidity	5~100%RH(relative humidity)
Measuring Range	1500:1,flow rate<15m/s
Structure type	Integral type,remote type,submersible type,ex-proof type
Protection Class	IP65,IP68(optional)
Ex-proof Mark	ExmdⅡT4
Product Standard	JB/T 9248-1999Electormagnetic Flowmeter

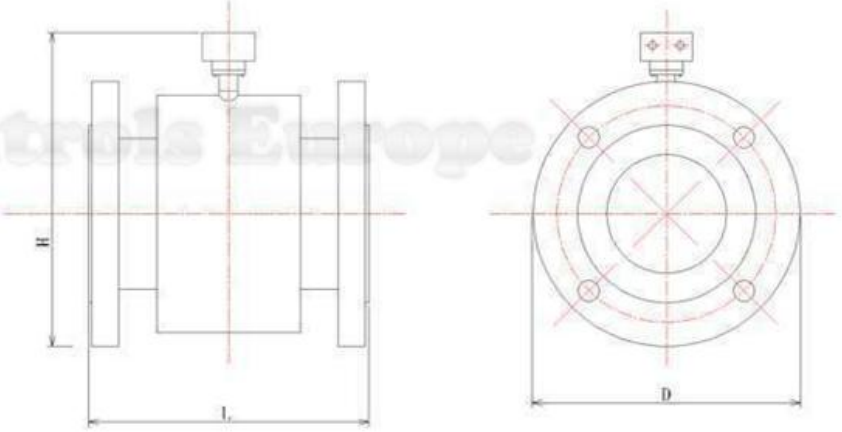

DN3-DN3000 the external drawing of flange electromagnetic flow sensor

flange diamension

Connecting flange and installing dimension see picture

executive standard of connection flange:

4.0MPa(DN3-DN150) GB/T9119-2000

1.6MPa(DN200-DN600) GB/T9119-2000

1.0MPa(DN700-DN1000) GB/T9115-2000

0.6MPa(DN1200-DN3000) GB/T9115-2000

(Special flange standard can be made to)

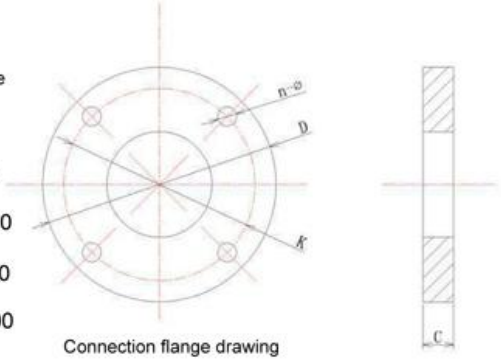

Connection flange drawing

External and installing dimension

Nominal diameter	Nominal pressure	External dimension				reference weight
		L of PTFE liner	L of Neoprene liner	D	H	
3	4.0	200(PFA)		90	220	4
6		200(PFA)		90	220	5
10		200	/	90	220	6
15		200	/	95	220	8
20		200	/	105	220	10
25		200	/	115	223	12
32		200	/	140	240	13
40		200	200	150	250	14
50		200	200	165	263	15
65		250	250	185	283	18
80		250	250	200	290	20
100		250	250	235	318	25
125		250	250	270	350	28
150		300	300	300	380	30
200	1.6	350	350	340	430	50
250		450	450	405	495	70
300		500	500	460	547	95
350		550	550	520	602	120
400		600	600	580	665	140
450		600	600	640	720	160
500		600	600	715	783	200
600		600	600	840	897	280
700	1.0	700	700	895	982	350
800		800	800	1015	1092	400
900		900	900	1115	1192	480
1000		1000	1000	1230	1299	550
1200	0.6	1200	1200	1405	1488	660
1400		1400	1400	1630	1700	750
1600		1600	1600	1830	1924	850
1800		1800	1800	2045	2134	980
2000		2000	2000	2265	2344	1200
2200		2200	2200	2475	2549	1600
2400		2400	2400	2685	2754	2000
2600		2600	2600	2905	3169	2400
2800		2800	2800	2905	3169	2700
3000		3000	3000	3315	3369	2900

Flange diamension

Nominal pressure	Caliber	D	K	Φ	n	C
4.0	3	90	60	14	4	14
	6	90	60	14	4	14
	10	90	60	14	4	14
	15	95	65	14	4	14
	20	105	75	14	4	16
	25	115	85	14	4	16
	32	140	100	18	4	18
	40	150	110	18	4	18
	50	165	125	18	4	20
	65	185	145	18	8	22
	80	200	160	18	8	24
	100	235	190	22	8	26
	125	270	220	26	8	28
	150	300	250	26	8	30
1.6	200	340	295	22	12	26
	250	405	355	26	12	28
	300	460	410	26	12	32
	350	520	470	26	16	35
	400	580	525	30	16	38
	450	640	585	30	20	42
	500	715	650	33	20	46
	600	840	770	36	20	52
1.0	700	895	840	30	24	30
	800	1015	950	33	24	32
	900	1115	1050	33	28	34
	1000	1230	1160	36	28	34
0.6	1200	1405	1340	33	32	28
	1400	1630	1560	36	36	32
	1600	1830	1760	36	40	34
	1800	2045	1970	39	44	36
	2000	2265	2180	42	48	38
	2200	2475	2390	42	52	42
	2400	2685	2600	42	56	44
	2600	2905	2810	48	60	46
	2800	3115	3020	48	64	48
	3000	3315	3220	48	68	50

2.3.2 Wafer and tri-clamp(sanitary) connection sensor features and drawing

External and installing dimension

Tri-clamp(sanitary)type sensor

Norminal Diameter(mm)	External Diamension			Reference weight
	H	W	L	
10	179	70	172	2.5
15	179	70	172	2.5
20	179	70	172	2.6
25	189	83	172	2.6
40	196	95	172	3
50	214	105	172	3.6
65	220	115	172	4.5
80	240	135	200	5.2
100	252	146	200	7
125	276	170	200	9.6
150	310	204	256	12.8
200	336	230	256	22

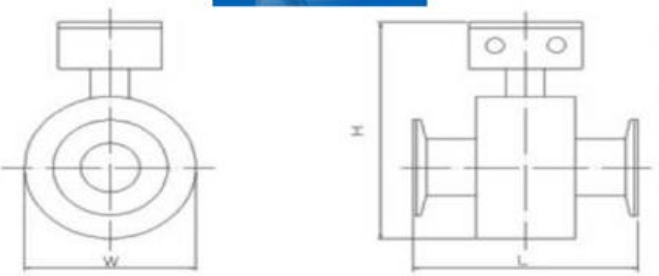

External drawing of tri-clamp(sanitary) sensor

Tri-clamp(sanitary) type sensor

Norminal Diameter(mm)	External Diamension			Reference weight
	H	W	L	
10	200	98	80	2.5
15	200	98	80	2.5
20	169	98	80	2.6
25	179	106	80	2.6
40	198	125	80	3
50	213	135	120	3.6
65	229	148	120	4.5
80	244	164	120	5.2
100	265	189	120	7
125	298	214	140	9.6
150	328	240	160	12.8
200	376	290	220	22

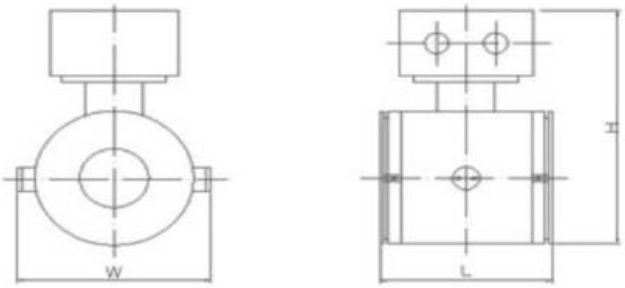

External drawing of clamp(wafer) sensor

Clamped/sanitary type electromagnetic Flow sensor

Caliber	DN3~DN200mm
Nominal Pressure	0.6~1.6MPa
Accuracy	±0.5 of the value displayed,±0.3% or ±0.2% are selectable
Electrode Type	conventionak electrode,electrode can be teardown
Electrode material	Stainless steel SUS316,Hastelloy C,Titanium,Tantalum Platinum-iridium,etc
Ambient Temperature	25℃below zero to 60℃
Structure type	Integral type ,remote type,submersible type,ex-proof type
Protection Class	IP65,IP68(optional)
Ex-proof Mark	Exmd II T4
Product Standard	JB/T 9248-1999Electormagnetic Flowmeter

2.3.3 Insertion type sensor features and drawing

Insertion type electromagnetic flow sensor

Caliver	DN100~DN3000mm
Nominal Pressure	1.6MPa
Material of the sensor measuring	ABS,POLY
Measuring pipe material	Carbon steel,stainless steel
Accuracy	Flow rate≤0.5/s,±0.5%,flow rate of full range>1m/s,±0.1%.
Medium Temperature	Plus 80℃
Electrode material	Stainless steel SUS316,Hastelloy C,Hastelloy B
Environment temperatur	25℃below zero to plus 60℃
Length of straight pipe	Upstream 15D,Downstream 10D
Atmosphere pressure	86~106kPa
Protection class	IP65,IP68(optional)
Ex-proof Mark	ExmdⅡT4
Connection mode	Flange type,thread type

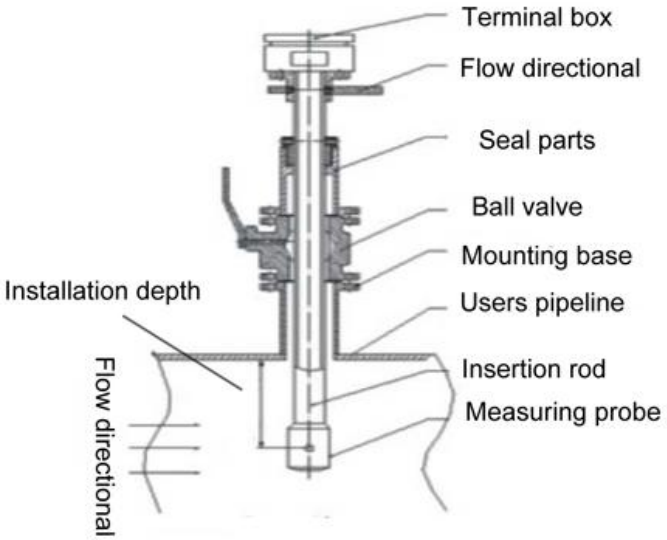

External drawing of insertion type sensor

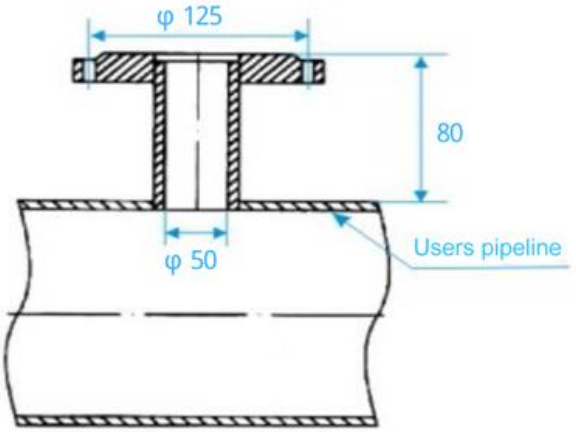

Installation size

3.Selection code table

3.1 HTLD SELECTION TABLE

Commen type electromagnetic flow meter

Selection

HTLD	XXX	X	X	X	X	X	X	X	X

Caliber(mm)	DN10~DN3000 3-digit code, seeing caliber code table 13								
Nominal pressure	0.6MPa		1						
	1.0MPa		2						
	1.6MPa		3						
	4.0MPa		4						
	Others		5						
Connection mode	flange connection			1					
	Clamp connection			2					
	Sanitary connection			3					
Liner material	PTFE				1				
	PFA				2				
	F46				3				
	Neoprene				4				
	Polyurethane				5				
Electrode material	Contain molybdenum stainless steel					1			
	Hastelloy B					2			
	Hastelloy C					3			
	Titanium					4			
	Platinum-iridium					5			
	Tantalum					6			
	Stainless steel covered with tungsten carbide					7			
Structure Type	1.Integral type						1		
	2.remote type						2		
	3.remote type immerse						3		
	4.integral type EX-proof						4		
	5.Remote type EX-proof						5		
Power	220VAC 50Hz							E	
	24VDC							G	
Output/ communication	A. Flow volume 4~20mADC /pulse								A
	B. Flow volume 4~20mADC /RS232C Communication								B
	C. Flow volume 4~20mADC /RS485 Communication								C
	D. Flow volume HART output /with communication								D
Converter figure	Square									A
	Circular									B

Optional selection

X	
1	Grounding electrode
2	Coupled flange
3	Entrance protection flange
4	Scraper type electrode
5	Others

Table 13 Caliber code table

Caliber (mm)	Code
10	100
15	150
20	200
25	250
32	320
40	400
50	500
65	650
80	800
100	101
125	125
150	151
200	201
250	251
300	301
350	351
400	401
450	451
500	501
600	601
700	701
800	801
900	901
1000	102
1100	112
1200	122
1400	142
1500	152
1600	162
1800	182
2000	202
2200	222
2400	242
2600	262
2800	282
3000	302

3.2 HTLD/D SELECTION TABLE

Battery powered type electromagnetic flow meter

converter | sensor

HTLD/D XXX X X X X X X XX X X X X X X X X X

main name

Caliber: DN3~DN600

Expression to three digits, the top two for the first, the second caliber digital, the third of the number of 0 for the unit for

Standard pressure

1: 0.6MPa 4: 4.0MPa
2: 1.0MPa 5: Others
3: 1.6MPa

Liner materials

1:Teflon 4:ETFE
2:Polyurethane 5:PTFE*
3:Neoprene 6:F46
7:PFA 8: others

Electrode material:

1: 316L 2: Hastelloy
3: Titanium 4: Tantalum
5: Platinum-iridium 6: Stainless steel covered with tungsten carbide 7: others

working environment

1: General place environment temperature ≤60℃ medium temperature≤80℃
2: General place environment temperature ≤60℃ medium temperature≤140℃(only with remote type)

grounding

0: unworthy grounding ring 1: worthy grounding ring

calibration

A: standard testing 0.5 class B: standard testing 0.2 class (15≤DN≤300)

Cable length

remote type:≤100m ,integral type is 00,if have special require, please description when place an order

outlet seal

1:20mm plastic seal (manufacturer will install finish when leave factory) 2:G1/2
3:1/2NPT 4:20mm plastic seal (the consumer install cable or Integral type)

connection mode:

F:flange connection J:Oil Charon connection K:Clamp connection C:insert connection

Structure Type H:: Integral type, R: remote type

power

1: 3.6V internal power supply

Display

1: Take the keyboard 3 lines display

output

0: RS485 output 1:pulse output

working environment

1.General place can not be used in seriflux

display direction

standard direction

Protection Class

1: Complete machineIP65 2: Complete machineIP67 3: sensor IP67, converter IP65
4: sensor IP68, converter Ip65 5: sensor IP68, converter IP67

Note: PTFE liner material of negative pressure ability is poor, such as existing in the pipeline has negative pressure, please consider using network type PFA or F46

ISO 9001:2008

MID 2004/22/TC
PED 91/23/EC

3.3 HTLD/C SELECTION TABLE

Insertion type electromagnetic flow meter

Selection

HTLD/C		XXX	X	X	X	X	X	X	X	X
	DN100~DN3000 3-digit code, seeing caliber code table 13									
Nominal pressure	1.6MPa		3							
	Others		5							
connection mode	With measuring pipe			1						
	Without measuring pipe			2						
Measuring pipe material	Carbon steel				1					
	304 stainless steel				2					
	Without measuring pipe				3					
Electrode material	Contain molybdenum stainless steel					1				
	Hastelloy B					2				
	Hastelloy C					3				
	Titanium					4				
	Tantalum					5				
	Platinum-iridium					6				
Structure Type	1.Integral type						1			
	2.remote type						2			
	3.remote type immerse						3			
	4.integral type EX-proof						4			
	5.Remote type EX-proof						5			
Power	220VAC 50Hz							E		
	24VDC							G		
output/ communication	A.Flow volume 4~20mADC /pulse								A	
	B Flow volume 4~20mADC /RS232C Communication								B	
	C. Flow volume 4~20mADC /RS485 Communication								C	
	D Flow volume HART output /with communication								D	
Converter figure	Square									A
	Circular									B

Optional selection

X	
1	coupled flange
2	Installation accessories
3	Others

Table 14 Caliber code table

Caliber (mm)	code
100	101
125	125
150	151
200	201
250	251
300	301
350	351
400	401
450	451
500	501
600	601
700	701
800	801
900	901
1000	102
1100	112
1200	122
1400	142
1500	152
1600	162
1800	182
2000	202
2200	222
2400	242
2600	262
2800	282
3000	302

4. Installation and grounding

4.1 Installation

PIPE MUST BE FULL OF MEDIUM

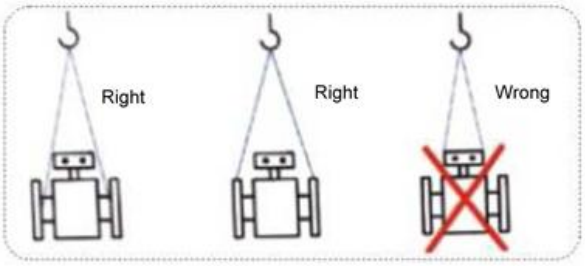

INSTALLATION BEHIND A PUMP

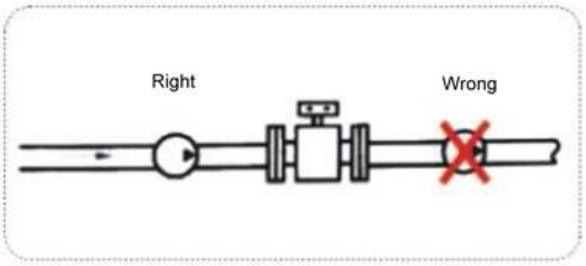

PIPE MUST BE FULL OF MEDIUM

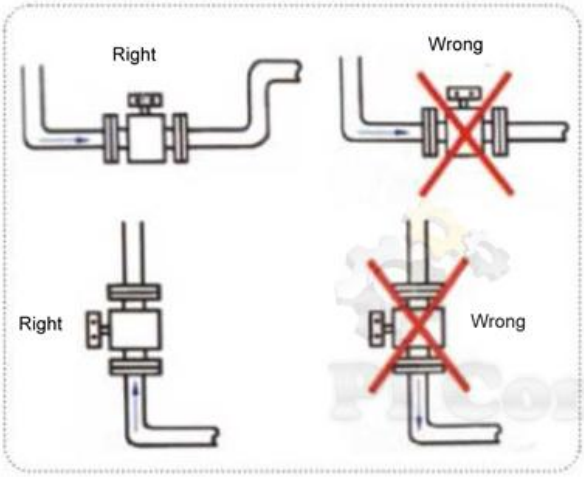

AVOID AIR BLADDER

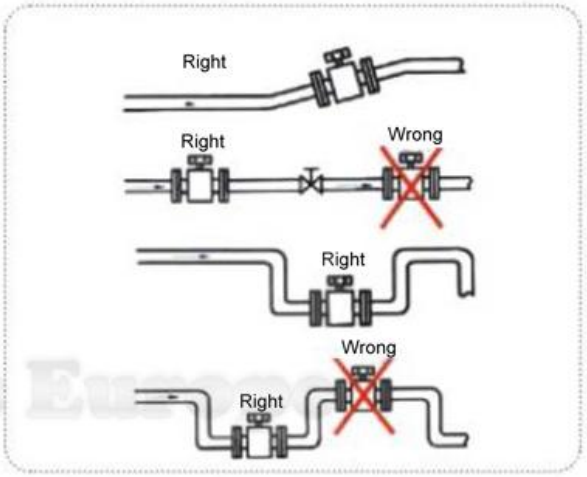

AVOID VIBRATIONS

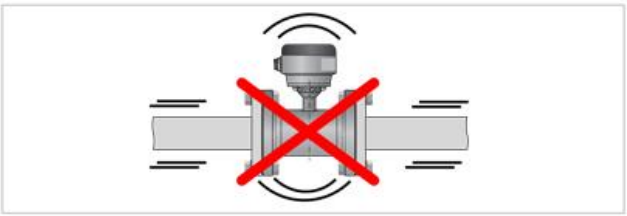

AVOID MAGNETIC FIELD

STRAIGHT PIPE REQUIREMENT

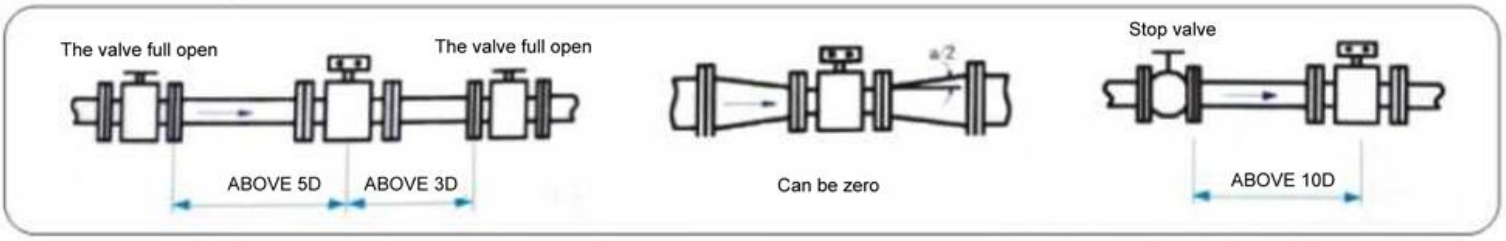

5.2 Grounding

CONNECTION AND GROUNDING BETWEEN THE SENSOR AND PIPE

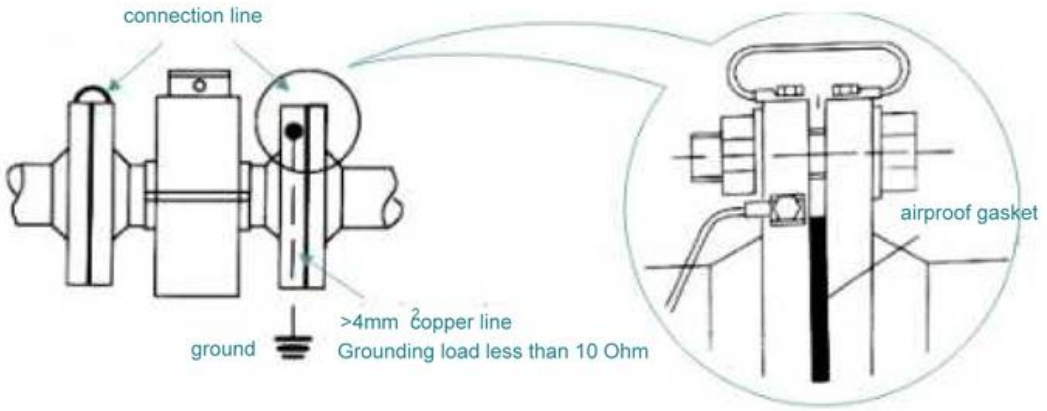

Metal pipe

Nonmetal pipe,sensor with grounding electrode

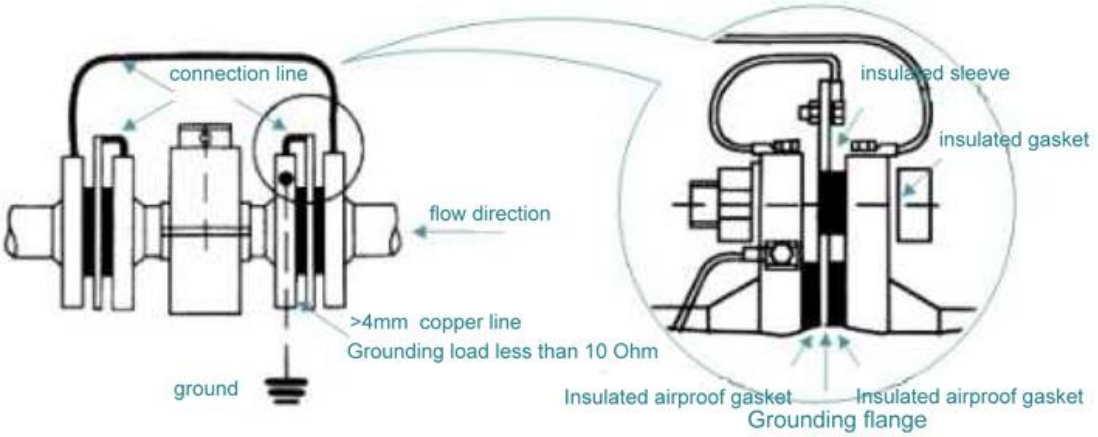

Pipe with cathode protection

5. Features of the liner material and electrode material

5.1 Main Performances Of The Liner Materials

Teflon

1.The most steady material in plastics which is resistibal to boiling hydrochlor ic acid,vitriolandqua fortis as well as strong alkali and organic impregnates.
2.Not be perfect in abrasion resistance.
Apply in strong corrosive mediums such as strong acid and alkali.

PFA

1.Having the same abrasion resistance with PTFE.
2.Having strong ability of load pressure resistance.
Applicable in state of load pressure.

F46

1.Have the same abrasion resistance with PTFE.
2.Resistable for low abrasion.
3.Having strong resistance to load pressure.
Have the same application with PTFE. Applicable in mediums of low abrasion.

Neoprene

1.Be of good elasticity,retractility and abrasion resistance.
2.Be resistant to low aicd,alkali and salt but not for oxidation mediums.
Apply in water,sewage treatment and slurry,mineral serosity of low abrasion.

Polyurethane

1.Be of good abrasion resistibility.
2.Not be perfect in acid/alkali resisitance.
3.Can't be used for water mixed with organic impregnants.
Applicable in mineral serosity,slurry and coal slurry of high abrasion.

5.2 Main Performances Of electrode materials

Stainless steel SUS316

Applicable in water,sewage and corrosive mediums. Widely used in industries of petrol,chemistry,carbamide,etc

Stainless steel covered with tungsten carbid

Applicable in mediums of no corrosive and low abrasion.

Hastelloy B(HB)

Having strong resistance to hydrochloric acid of any consistance which is below bioling piont.
Also resistable against vitriol,phosphate,hydrofluoricacid,organic acid etc,which are oxidable acid,alkali and non-oxidable salt.

Hastelloy C(HC)

Be resistant to oxidable acid such as nitric acid,mixed acid as well as oxidable salt such as Fe+++,Cu++and sea water

Titanium

Applicable in seawater,and kinds of chloride,hypochlorite salt,oxidable acid(including fuming nitric acid),organic acid,alkali etc.Not resistant to a pure reducing acid(such as sulphuric acid,hydrochloric acid)corrosion.
But if acid contains antioxidant(such as Fe+++,Cu++)will greatly reduce corrosion.

Tantalum

Having strong resistance to corrosive mediums that is similar with glass. Almost applicable in all chemical mediums.Except for hydrofluoric acid,oleum and alkali.

Platinum-iridium

Almost be applicable in all chemical mediums except for aqua fortis,ammonium salt.

6. Rate-flow Comparison

Rate-Flow comparison							
m^3/h \ m/s \ mm	0.5	1	2	3	4	5	15(max)
10	0.1414	0.2827	0.5654	0.8482	1.1309	1.4137	4.2411
15	0.3481	0.6362	1.2723	1.9085	2.5447	3.1809	9.5426
20	0.5655	1.1310	2.2619	3.3929	4.5239	5.6549	16.9646
25	0.8836	1.7671	3.5343	5.3014	7.0686	8.8357	26.5072
32	1.4476	2.8953	5.7906	8.6859	11.5812	14.4765	43.4294
40	2.2619	4.5239	9.0478	13.5717	18.0956	22.6195	67.8584
50	3.5343	7.0686	14.1372	21.2058	28.2743	35.3429	106.0288
65	5.9730	11.9459	23.8918	35.8377	47.7836	59.7295	179.1886
80	9.0478	18.0956	36.1911	54.2867	72.3823	92.4779	271.4336
100	14.1372	28.2743	56.5487	84.8230	113.0973	141.3717	424.1150
125	22.0893	44.1786	88.3573	132.5359	176.7146	220.8932	662.6797
150	31.8086	63.6173	127.2345	190.8518	254.4690	318.0863	954.2588
200	56.5787	113.0973	226.1947	339.2920	452.3893	565.4867	1696.4600
250	88.3573	176.7146	353.4292	530.1438	706.8583	833.5729	2650.7188
300	127.2345	254.4690	508.9380	763.4070	1017.8760	1272.3450	3817.0351
350	173.1803	346.3606	692.7212	1039.0818	1385.4424	1731.8030	5195.4089
400	226.1947	452.3893	904.7787	1357.1680	1809.5574	2261.9467	6785.8401
450	286.2776	572.5553	1145.1105	1717.6658	2290.2210	2862.7763	8588.3289
500	353.4292	706.8583	1413.7167	2120.5750	2827.4334	3534.2917	10608.7520
600	508.9380	1017.8760	2035.7520	3053.6281	4071.5041	5089.3801	15268.1403
700	692.7212	1385.4424	2770.8847	4156.3271	5541.7694	6927.2118	20781.6354
800	904.7787	1809.5574	3619.1147	5428.6721	7238.2295	9047.7868	27143.3605
900	1145.1105	2290.2210	4580.4421	6870.6631	9047.7868	11451.1052	34353.3157
1000	1413.7167	2827.4334	5654.8668	8482.3002	11309.7336	14137.1669	42411.5008
1200	2035.7520	4071.5041	8143.0082	12214.5122	16286.0163	20357.5204	61072.5612
1400	2770.8847	5541.7694	11083.5389	16625.3083	22167.0778	27708.8472	83126.5416
1600	3619.1147	7238.2295	14476.4589	21714.6884	28952.9179	36191.1474	108573.4421
1800	4580.4420	9160.8842	18321.7684	27482.6526	36643.5367	45804.4209	137413.2627
2000	5654.8667	113097.3360	22619.4671	33929.2007	45238.9342	56548.6678	169646.0033
2200	6842.3887	13684.7776	27369.5552	41054.3328	54739.1104	68423.8880	205217.6640
2400	8143.0080	16286.0163	32572.0326	48858.0490	65144.0653	81430.0816	244290.2448
2600	9556.7247	19113.4268	38226.8536	57340.2804	76453.7072	95567.1340	286701.4020
2800	11083.5387	22167.0774	44334.1548	66501.2322	88668.3095	110835.3869	332506.1608
3000	12723.4500	25446.9001	50893.8001	76340.7002	101787.6002	127234.5003	381703.5009
3	0.013	0.025			0.102		0.382
6	0.051	0.102			0.407		1.526