PI Controls Europe
INSTRUMENTATION SOLUTION PROVIDER

Description

PI Controls Europe Intelligent pressure gauge is made with entire electronic structure, and uses battery as power supply. It is easy for field installation. PIC intelligent pressure gauges are using high accuracy piezoresistive pressure sensors, which is located in the front end of PG. The output signal of the pressure sensor is processed and amplified by high accuracy and low temperature coefficient amplifier, and then transferred to A/D switch to transform digital signal which can be processed by microprocessor. After processing operation, the pressure gauge will demonstrates the actual value of the pressure by LCD indicator. It has automatic turn-off function in 1~15min.

The use of PIC intelligent pressure gauge is obviously flexible, and its operation is very simple, and the adjustment of this gauge is easy, safe and reliable. PIC inelligent pressure gauge is widely used in such industries as water and electricity, running water, petroleum, chemical, and machinery, for the measurement and demonstration of fluid medium's pressure.

Features

- LCD display, high resolution, without apparent value error
- Peak value recording function, record the max. pressure value during measuring process
- Pressure percentage dynamic demonstration (progress strip demonstration)
- Selectable ranges: MPa, psi, bar, kPa, kg/cm2
- 1~15min automatic turn-off function
- Micro power loss function, can work above 2 years in the electricity saving pattern
- Parameter revision function, can revise the gauge's zero error on the spot

Specifications

pressure medium	gas or liquid compatible to stainless steel
pressure ranges	-1...0~0.1...1000 bar
pressure type	gauge(G), absolute(A), sealed gauge(S)
overload pressure	150%FS
accuracy	0.1%FS,0.25%FS(standard), 0.5%FS
LCD display	4-digit
display range	-1999~9999
long-term stability	<0.1%FS/year
battery power supply	9V DC
compensated temperature range	0~+50℃
operating temperature range	-20~+70℃
selectable ranges	Mpa, psi,bar, kpa, kg/cm2
sampling speed	4 times/sec.
insulation resistance	100MΩ@50VDC
process connection	G1/2 or others
housing material	1Cr18Ni9TI and plastic

Dimensions

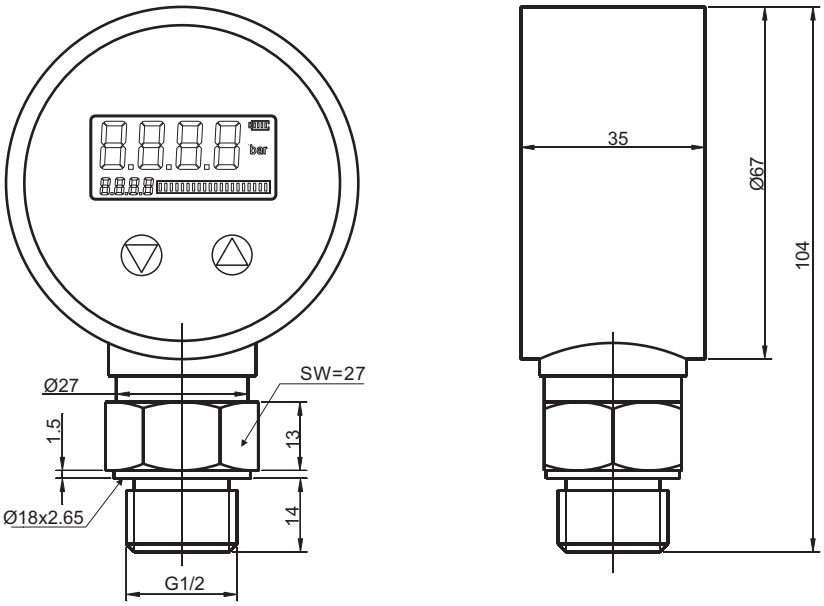

Ordering code

PIC					
	range	measuring range: -1...0~0.1bar...1000bar			
	(X1~X2)bar	X1: lower limit of actual measuring range, X2: higher limit of factual measuring range			
		code	pressure type		
		G	gauge		
		A	absolute		
		S	sealed gauge		
			code	accuracy	
			B	0.1%FS	
			C	0.25%FS	
			D	0.5%FS	
				code	process connector
				P1	G1/4"
				P2	G1/2"
				P4	M20×1. 5
				P5	1/2"NPT
				Pz	customer request
PIC	(0~20)bar	G	C	P2	